CL4TF-NOVUS EURO Ⅴ 6x4 TRACTOR (350PS,9S)

Engine

Model	DL08K (Euro Ⅴ)
Type	Turbo intercooler, diesel
Max. Power	350ps(257.4kW) @ 2,100 rpm
Max. Torque	150kg.m(1,471Nm) @ 1,200 rpm
No. of cylinder	In line 6 cylinder
Bore x Stroke	108X139 (mm)
Displacement	7,640 (cc)
Controller type	Electronic
Air cleaner	Dry paper elements

Transmission

Model	FSO10309A
Type	Manual F9/R1
Crawler	10.58
1st/2nd	7.38 / 5.22
3rd/4th	3.71 / 2.73
5th/6th	1.99 / 1.41
7th/8th	1.00 / 0.74
Reverse	10.59

rakes

Service : Full air brake. dual circuit
Drum diameter : 410 mm
Lining width Front : 190mm
Rear : 203mm
Material : Non-Asbestos
Parking : Acting on spring actuator at rear wheels
Auxiliary : Exhaust brake
(option : ABS & ASR)

A les

Front	Reverse elliot "I" beam, Capacity : 7,100 kg
Rear	Banjo single reduction Final drive ratio : 6.166, Capacity : 23,000 kg

F Tank

Mounted on right-hand side of the frame
Capacity – 400 liter
Material : Steel
(option : Aluminum 400 liter
Aluminum 400 + 300 liter
Steel 400 + 200 liter)

Tires

Front : 12R22.5-16PR, 8.25×22.5
Rear : 12R22.5-16PR, 8.25×22.5
(option : 315/80R22.5, 12.00R24)

Steering

Driving position	Left-hand drive
Type	Recirculating ball with integral Power assisted by oil
Steering column	Tilt & telescopic
Steering wheel	2-spoke wheel with horn button

Clutch

Type	Hydraulic control with air assisted Dry single plate with diaphragm
Plate diameter	Out side diameter : 430mm

Suspension

Front suspension	Type : Semi-elliptical leaf spring Size(LxW) : 1,500 x 90 (mm)
Rear suspension	Type : Semi-elliptical leaf spring Size(LxW) : 1,350 x 90 (mm)

Electrical tem

Batteries	12 volt-170Ahx2
Alternator	24 volt / 80 amp
Starter	24 volt / 6.0kW

Coupler

Make and Type	Universal 2"
Loading capacity	25ton

(option : Rollingless 2", Universal/Rollingless 3.5")

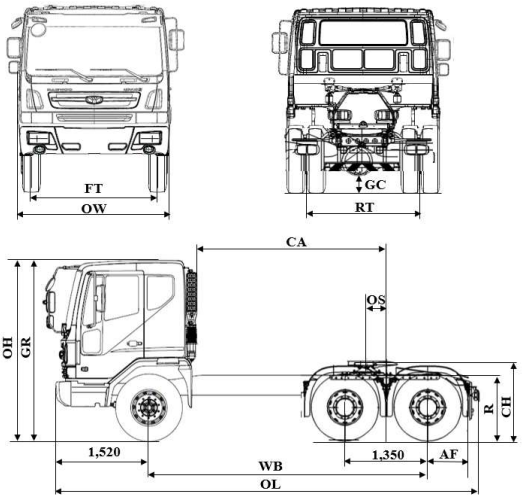

Dimension (mm)

OL	Overall length	7,000
OW	Overall width	2,495
OH	Overall height	3,015
FT	Tread – front	2,080
RT	Tread – rear	1,850
WB	Wheelbase	4,650
AF	Rear axle to frame	685
GR	Ground to roof	3,015
R	Frame-ground above bogie	1,065
CA	Usable cab to axle	3,195
OS	Deck offset	300
CH	Coupler height	1,330
GC	Min. ground clearance	250
	Swing radius Forward	2,500
	Rearward	2,080

(kg)

Curb weight	Front	4,450
	Rear	4,580
	Total	9,030
Axle load	Front	7,100
	Rear	23,000
Permissible G.C.W		55,000

Calculated Performance (@ Permiss G.C.W)

Max. speed(km/h)	95
Max. gradeability(%)	31
Min. turning radius (m)	7.5

Frame

Type	Ladder type, single channel
Size (HxVxt)	286 x 90 x 7 (mm)

- Dimension & Weight are approximate.
- Permissible weight includes upper body weight. Always observe national regulations on permissible axle loads and gross weight.

DAEWOO TRUCKS, 172 Dongjangsan-ro(St.), Gunsan, Jeonbuk, 573-715 Korea
Telephone(82)-63-469-3054, 02-776-4396 Fax(82)-63-469-3200, Website at http://www.daewootruck.com
Above specifications are based on export condition and subject to change without prior notice. December. 2018